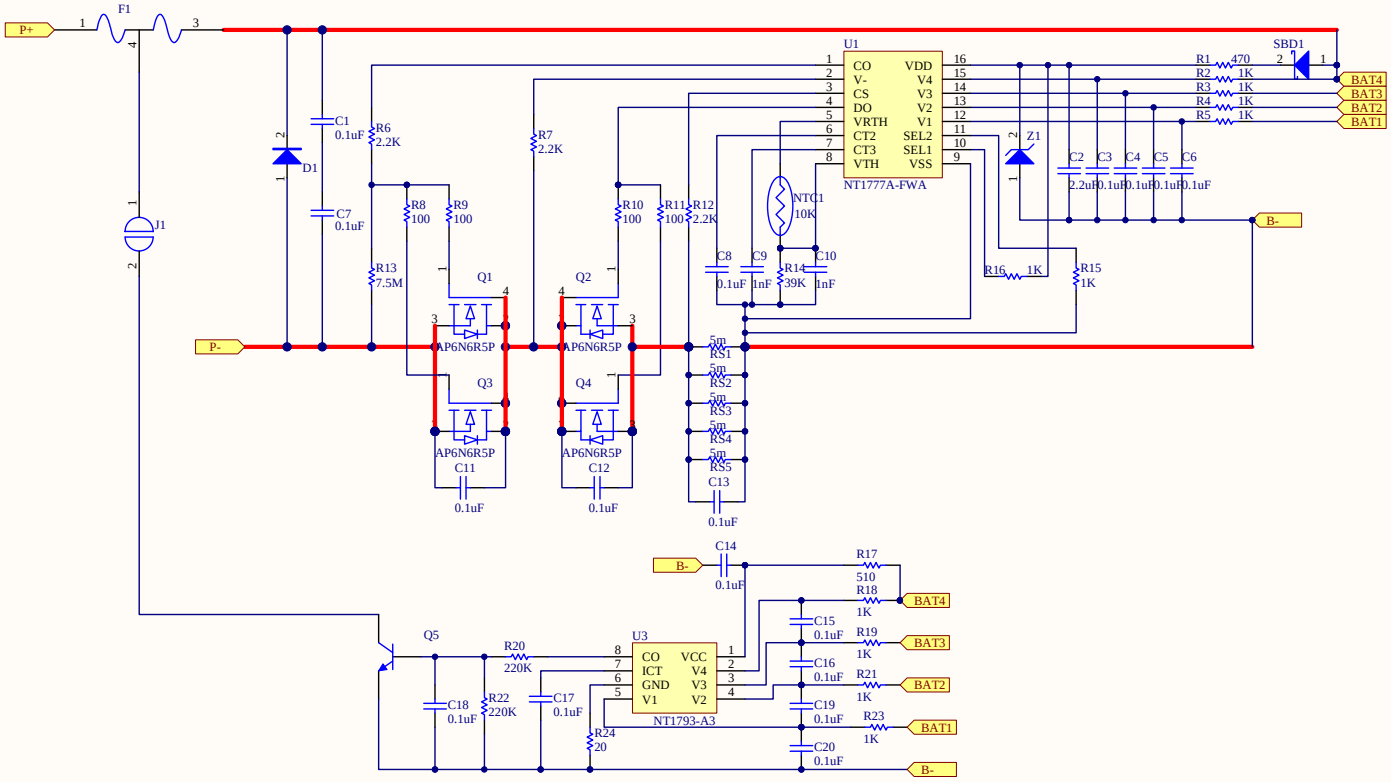

Title		
Size A3	Number	Revision
Date: 2018/3/26		Sheet of
File: C:\Users\..\Sheet1.SchDoc		Drawn By: